SMART IRRIGATION CONTROLLER

GROUP MEMBERS

1. ANANDHAKRISHNAN R (15)
2. GOURISANKAR K RAJESH (41)
3. SAVIN VINAYAK T VINOD(64)
4. VISHNU VINIL(69)

OBJECTIVE

- The objective of this project is to design and implement a Digital Logic Based Smart Irrigation Controller that automatically controls water supply based on soil moisture conditions.
- The system aims to reduce water wastage, minimize electrical energy consumption, and promote sustainable agricultural practices by ensuring irrigation only when necessary

SCOPE

The scope of the Smart Irrigation Controller can be extended in several ways to improve efficiency and applicability in real-world agricultural systems:

- The system can be expanded to support multiple field zones, allowing independent irrigation control for different crops.
- The project can be enhanced with automatic water level monitoring to prevent dry running of pumps.
- It can be adapted for large-scale agricultural applications by increasing the number of control units.

COMPONENTS REQUIRED

Name	Quantity	Component
U1	1	Arduino Uno R3
D1	1	Red LED
D2	1	Green LED
R2 R3	2	220 Ω Resistor
SEN1	1	Soil Moisture Sensor
M1	1	DC Motor
T1	1	nMOS Transistor (MOSFET)

CIRCUIT DIAGRAM

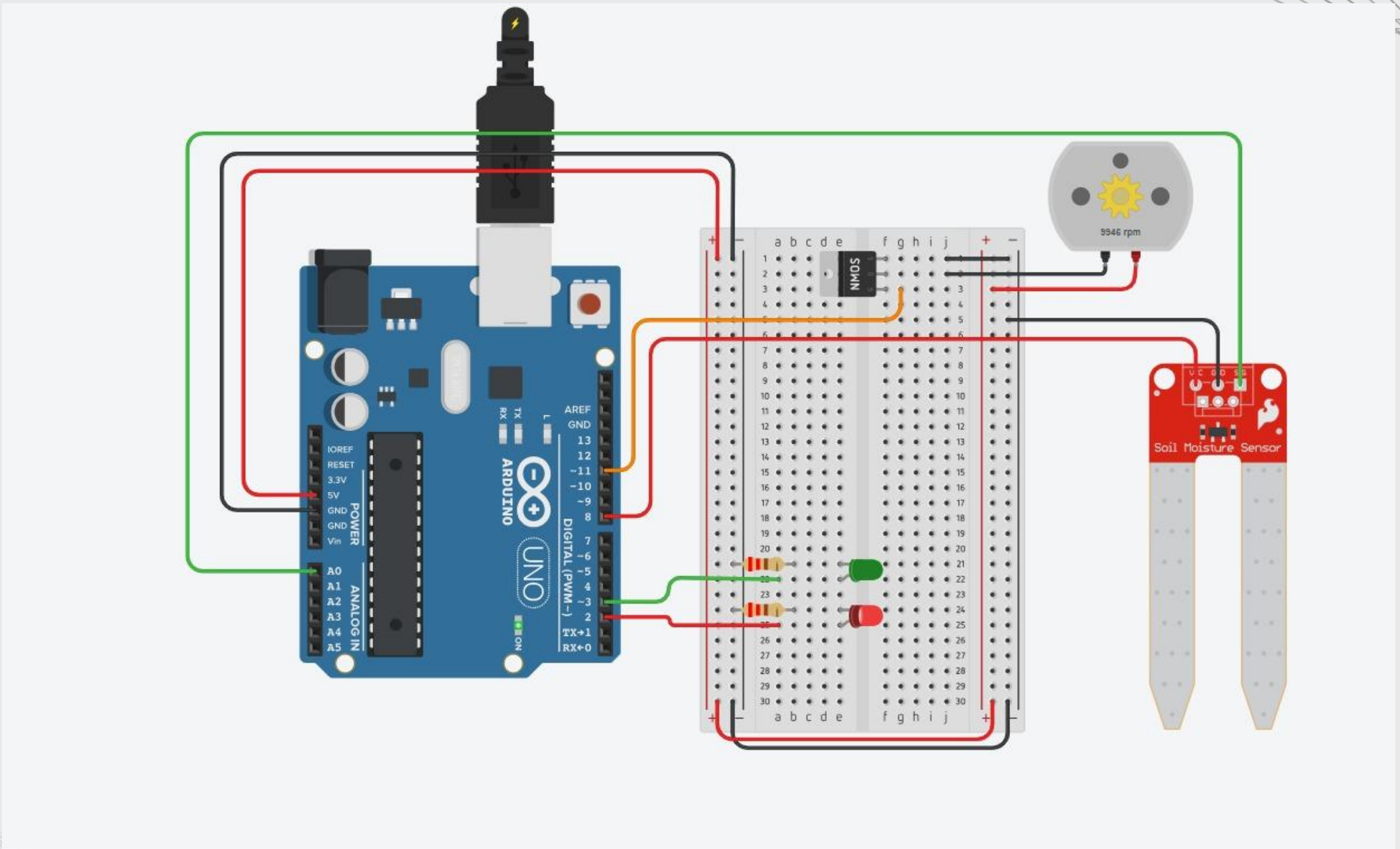

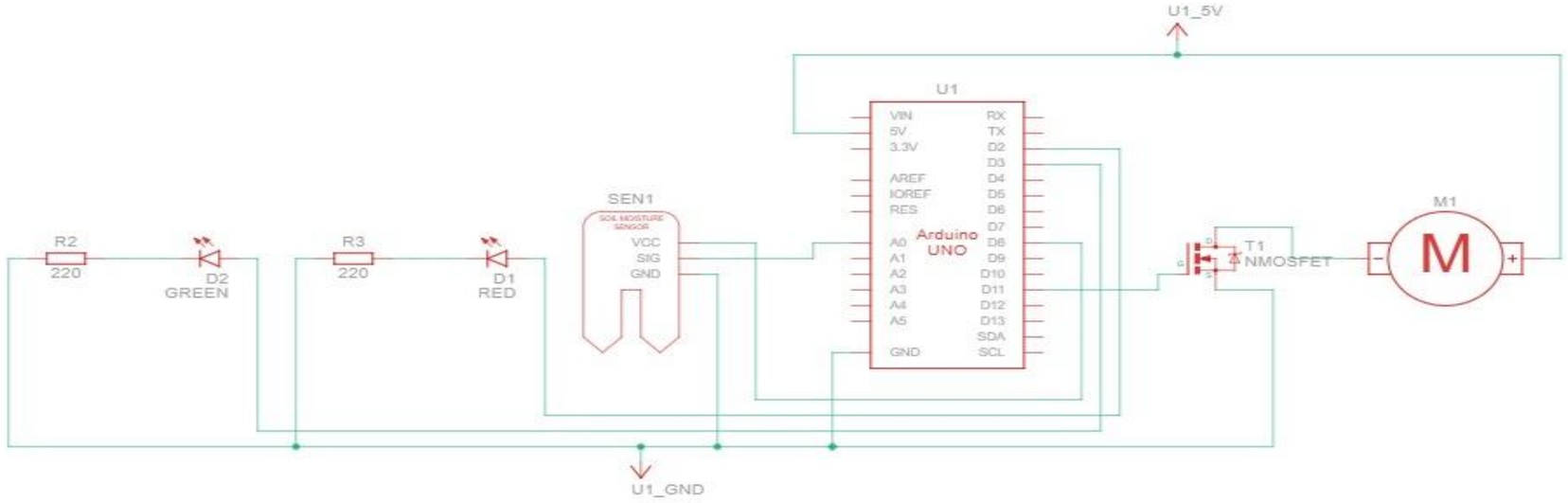

Made with Tinkercad®

Title: Copy of Arduino Soil Moisture Sensor with Automatic Pump (2 LEDs)

Date: 2/25/2026, 9:51:02 PM

Sheet: 1/1

WORKING

- The soil moisture sensor continuously monitors the moisture content of the soil.
- When the soil is dry, the voltage becomes High(logic 1), activating the digital logic circuit.
- The logic circuit then energizes the water pump, which turns ON the water pump.
- When sufficient moisture is detected, the voltage becomes Low(logic 0), causing the logic circuit to deactivate and the pump to turn OFF.
- This irrigation is automatically controlled based on real time skill moisture condition.

SUSTAINABLE GOALS

🌱 SDG 6: Clean Water and Sanitation

The system ensures efficient use of water by supplying irrigation only when required.

Prevents over-irrigation and reduces water wastage.

⚡ SDG 7: Affordable and Clean Energy

Reduces unnecessary operation of water pumps.

Helps in saving electrical energy used in irrigation systems.

RESULT

- The system successfully automates irrigation, preventing over-watering and reducing manual intervention.
- It ensures efficient utilization of water and electrical energy, thereby contributing to sustainable resource management.
- The project demonstrates the practical application of digital electronics concepts such as comparators, logic gates, binary decision-making, and relay control in real-world agricultural systems.

REFERENCE

- M. Morris Mano, Digital Design, Pearson Education.
- R. P. Jain, Modern Digital Electronics, McGraw Hill Education.
- A. Anand Kumar, Fundamentals of Digital Circuits, PHI Learning

THANK YOU